HERRMANN

we lift cars

OIL HYDRAULIC LIFTS

Alu Track Lift 2.50

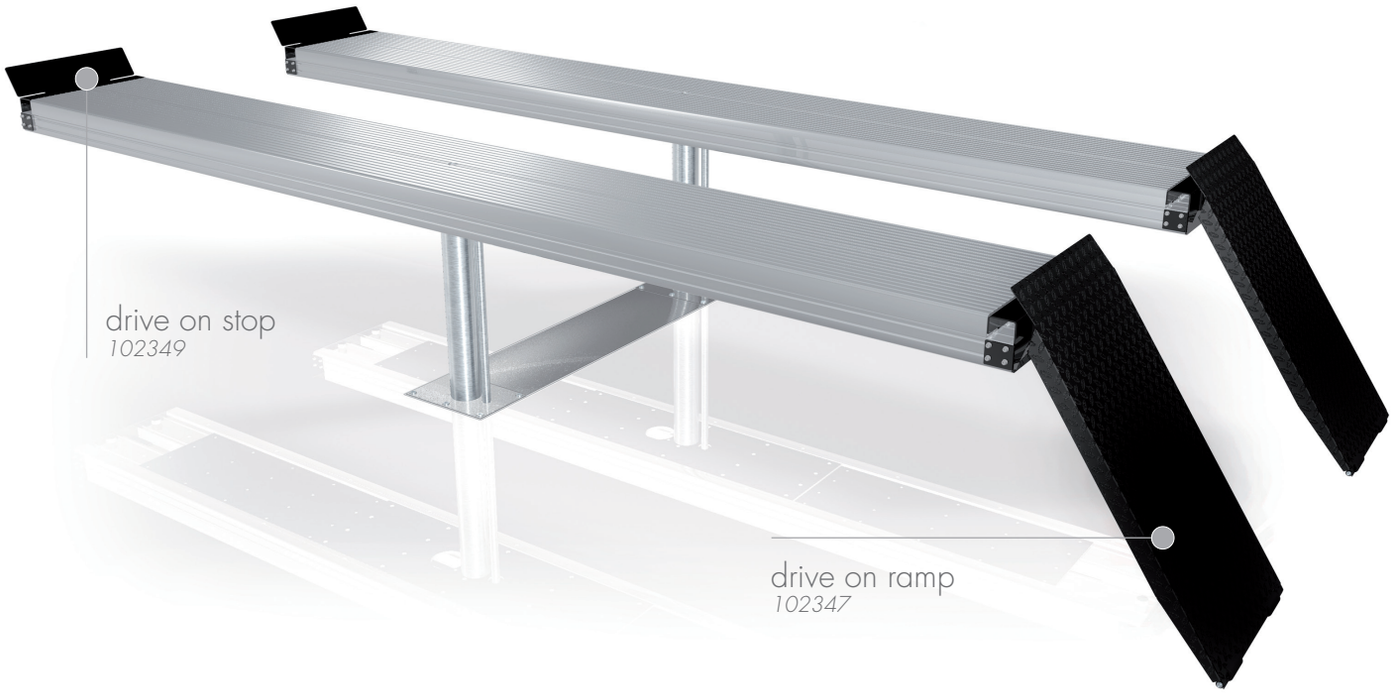

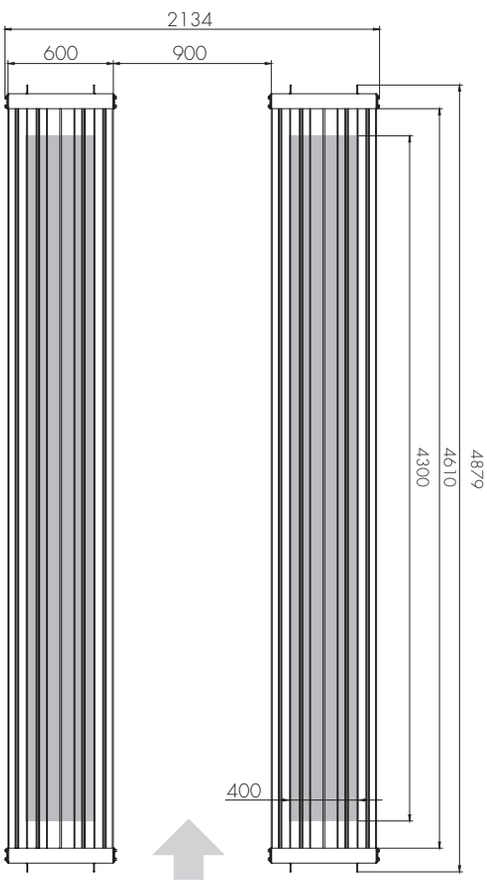

TECHNICAL DATA

capacity	5000	kg
lifting height	1860	mm
effective raise height	2020	mm
platform length	4800	mm
platform height	180	mm
piston diameter	123	mm
piston distance	1500	mm
installation depth	2443	mm
motor output	3,0	kW
power connector	400 V/16 A	
cable length to control	8	m
lifting time	≈ 35	sec.
lowering time	≈ 35	sec.

Platform support Alu Track 2.50	104980
Installation cassette STEEL 1500 mm	2030XX
Installation cassette STEEL 1500 mm galvanized	2031XX
Lifting unit oil 5,0 t 1500 mm - K pre-assembled in installation cassette	104960
Lifting unit oil 5,0 t 1500 mm - H packed in wooden box	104961

Accessories

Drive on ramp

for installation flush with floor level

102346

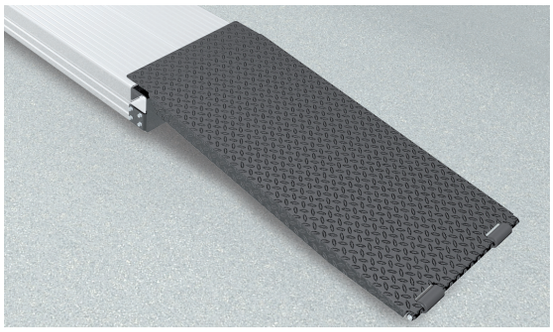

Drive on ramp

for floor incumbent installation
1250 mm, hanging, bevel 7°

102347

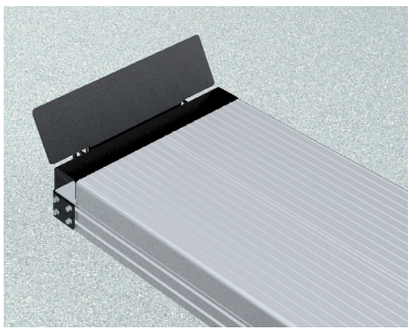

Drive on stop

102349

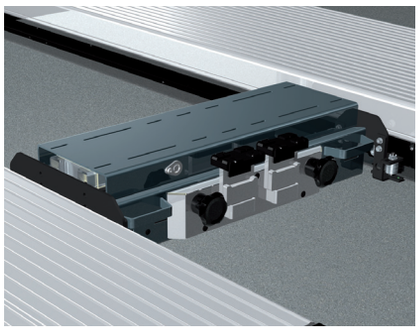

Axle lifter

2600 kg, pneumatic, without slide rails

105063

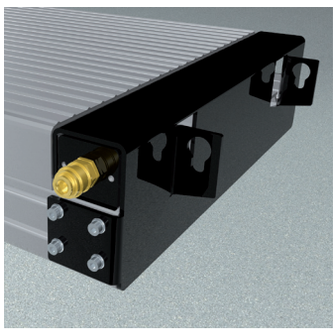

Compressed air supply

for floor incumbent installation
or rectangular foundation

102407

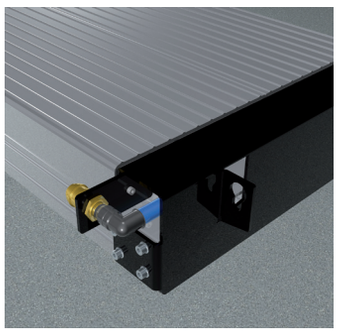

Compressed air supply

for installation flush with
floor level in H-frame

105617

Slide rail set

4400 mm

102374

4800mm

102375

Wheel alignment supports

1350 mm

102377

600 mm

102381

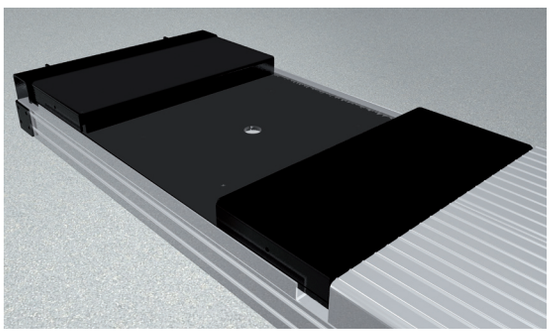

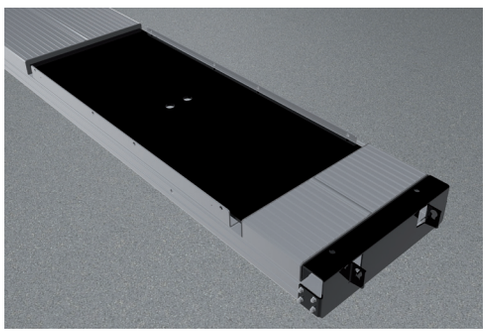

Platform support with platform notches for turn tables and for sliding plates incl. levelling plates

Support Alu Track 2.35
1200 mm / 1200 mm
105238

Support Alu Track 2.50
1400 mm / 1400 mm
105266

Support Alu Track 2.35 Duplo
1200 mm / 1200 mm
105244

Support Alu Track 2.50 Duplo
1400 mm / 1400 mm
105259

Support Alu Track 4.40
1400 mm / 1400 mm
105269

Support Alu Track 4.65
1000 mm / 2x1400 mm
105272

Accessories

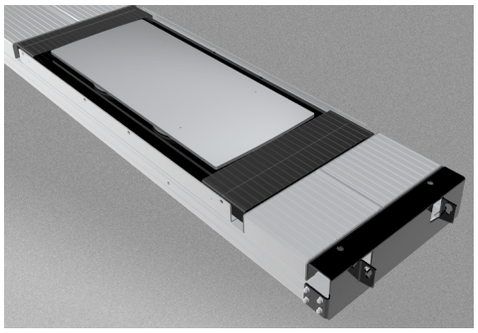

Sliding plate Standard

1050 mm
102426

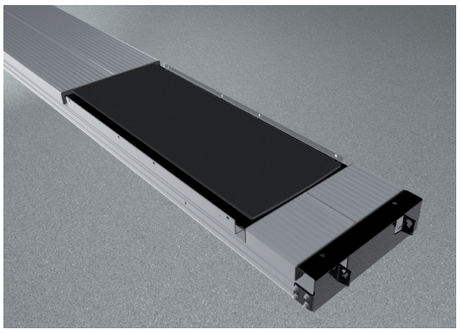

Sliding plate Precision

1200 mm *102423*
1400 mm *102424*

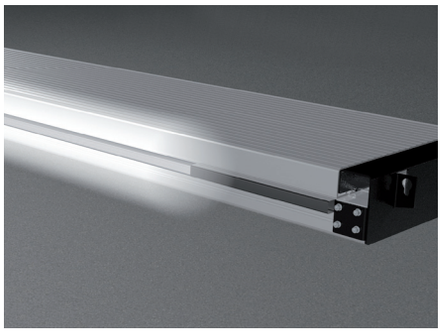

Illumination set LED Alu Track

102394

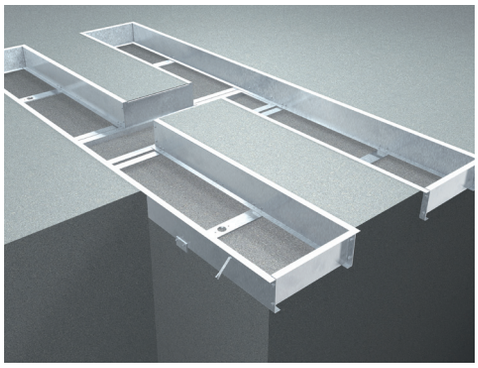

Surround frame 2-piston

for installation flush with floor level

4400 mm
102356

4800 mm
102361

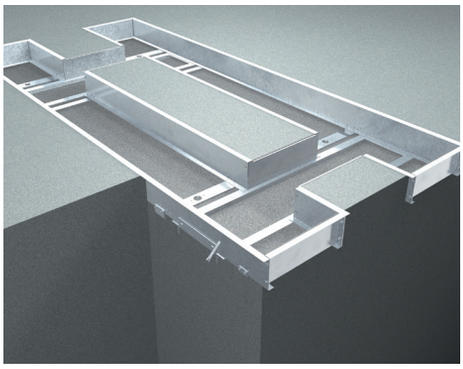

Surround frame 4-piston

for installation flush with floor level

4400 mm
105177

5500 mm
102387

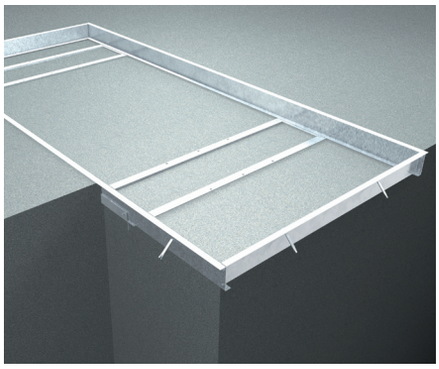

Surround frame rectangle

for installation flush with floor level

2-piston 4400 mm *105335*
4-piston 4800 mm *106108*
2-piston 4800 mm *106187*
4-piston 5500 mm *106137*

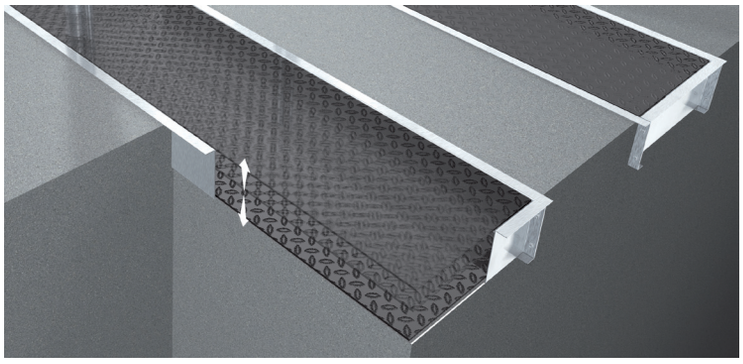

Automatic floor levelling system

2-piston 4400 mm *102366*
2-piston DUPLO 4400 mm *102363*
4-piston 4800 mm *105178*
2-piston 4800 mm *102428*
2-piston DUPLO 4800 mm *102365*
4-piston 5500 mm *102392*

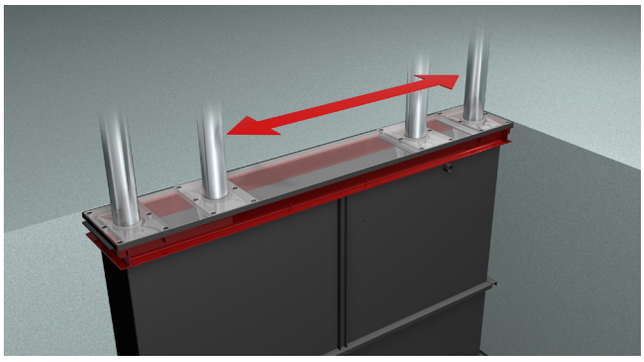

Future Proof installation cassette

Steel 2285 mm, drilling patterns 2285/1785/1335
2150XX

Steel galvanized 2285 mm, 2285/1785/1335
2151XX

HERRMANN

Herrmann AG
Bahnhofstrasse 32
D-93483 Pösing

Sales
Phone: +49 (0)9461/91388 50
Fax: +49 (0)9461/91388 55
E-Mail: sales@herrmann.de

Service
Phone: +49 (0)9461/91388 30
Fax: +49 (0)9461/91388 33
E-Mail: service@herrmann.de

www.herrmann.de

June 2016

Amendments and mistakes reserved.
All illustrations are not binding.

we lift cars